About Camera Mounting Bracket Sets

Compact router outdoor type with wireless LAN · https://manual.amnimo.com/en/docs/compact-router-outdoor-type-with-wireless-lan/about-camera-mounting-bracket-sets/

Camera Mounting Bracket Set (Separate Type)

Attach the camera mounting bracket to the main unit with the four screws provided with the camera mounting bracket.

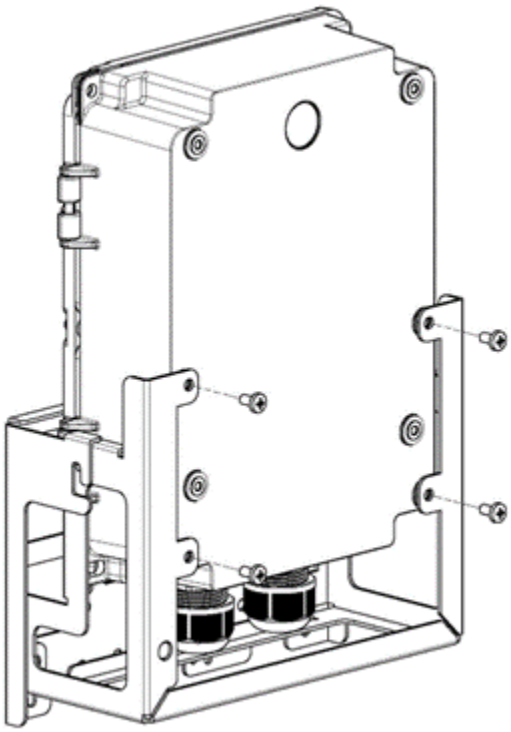

Loosen the four screws on the camera mounting bracket and remove the camera plate section.

Memo

The camera plate section can be removed by slightly loosening the screws.

Note that if you loosen the screws all the way to the end with an electric screwdriver, etc., the washers that prevent the screws from falling out will come off.

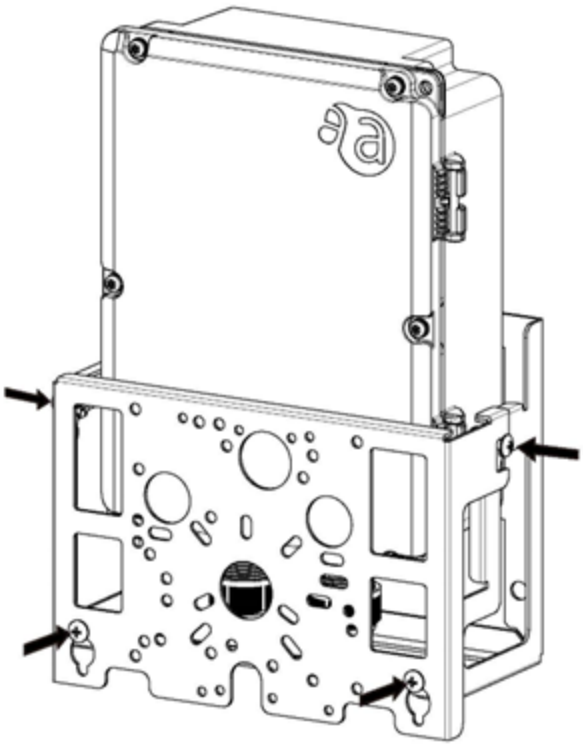

Attach the camera to the camera plate section using the appropriate screws and nuts for the camera.

Memo

Refer to the following for the mounting position of each camera.

⇒[AC25] Camera mounting bracket: List of mounting holes for each camera

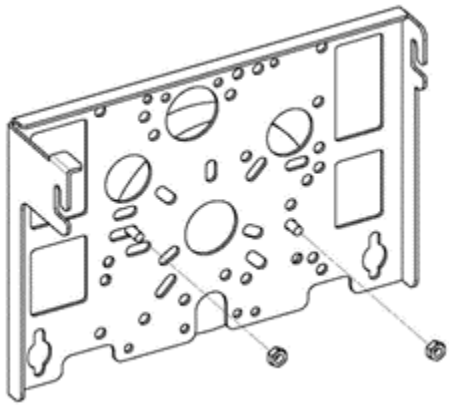

Make cable connections between the camera and the main unit. Return the camera plate and tighten the mounting screws.

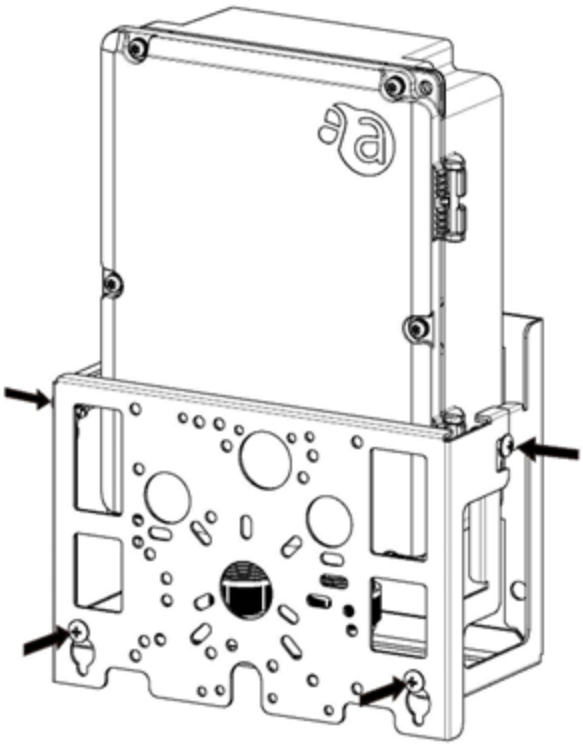

Even after the camera is mounted, maintenance of the main unit can be performed by removing the camera plate section, turning it over, and hooking it onto the screws.

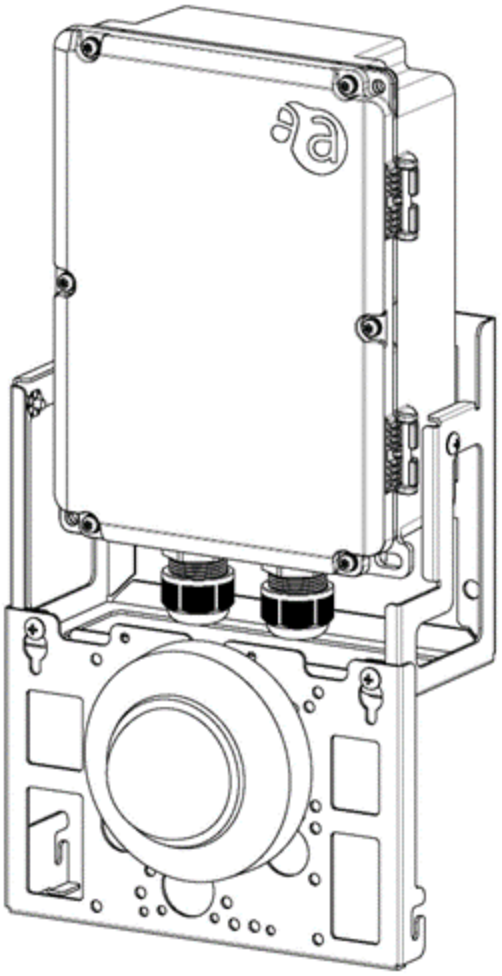

Camera mounting bracket set (integrated type)

Attach the camera to the camera mounting bracket with the appropriate screws and nuts for the camera.

Memo

Refer to the following for the mounting position of each camera.

⇒[AC25] Camera mounting bracket: List of mounting holes for each camera

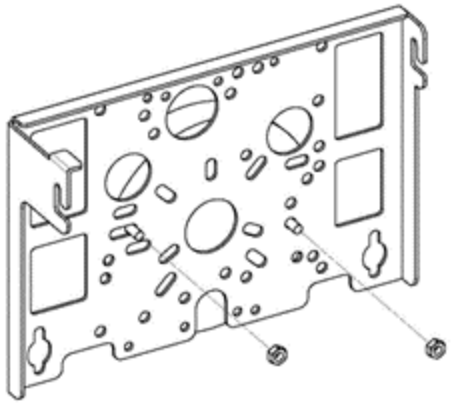

Make wiring connections between the camera and the main unit.

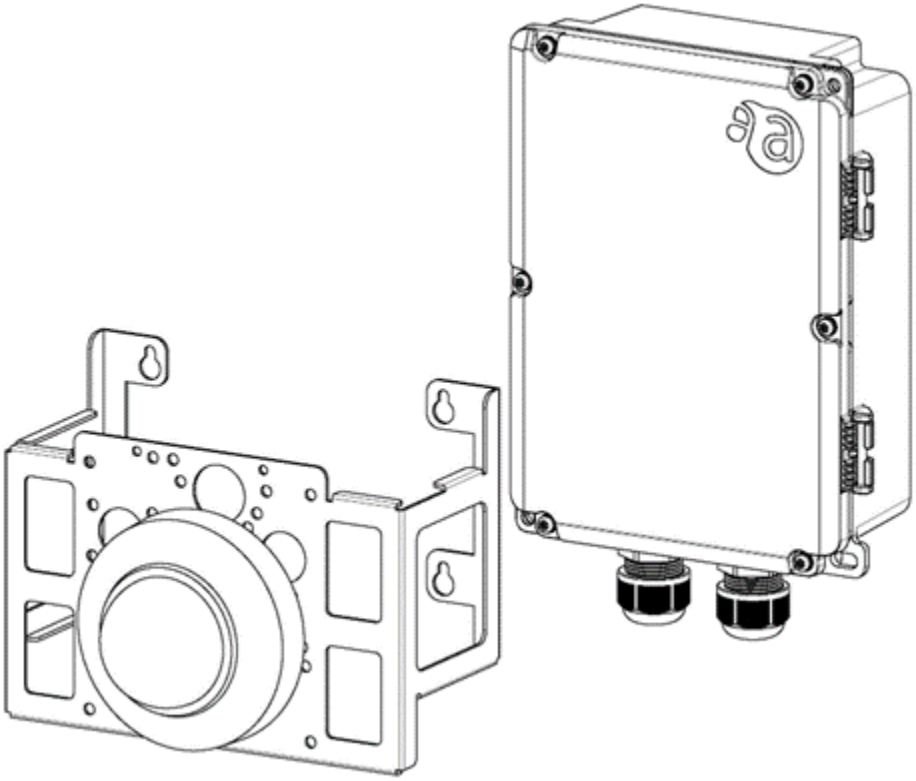

Attach the camera mounting bracket to the main unit with the four screws provided with the camera mounting bracket.

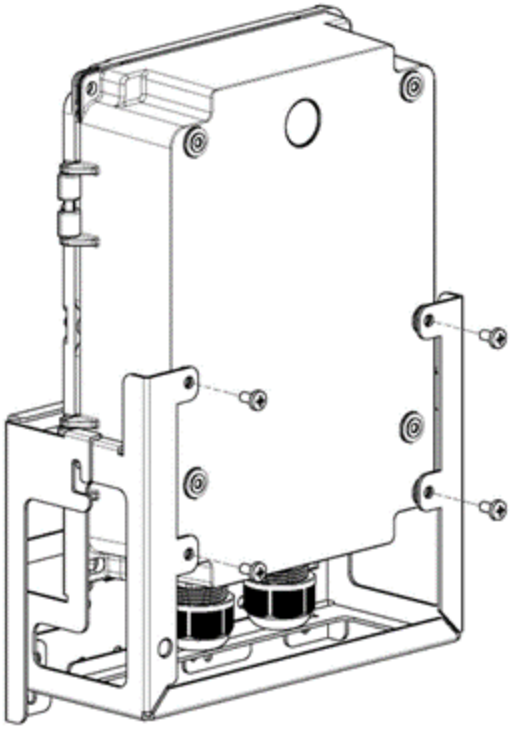

Cable installation method for camera mounting bracket set

Cable ground section

In Amnimo's standard optional cable gland, there is a slit in the rubber shield section, so the jack part of the LAN cable can be passed through.

The slit makes it a cable gland that allows even small, pre-installed connectors to pass through.



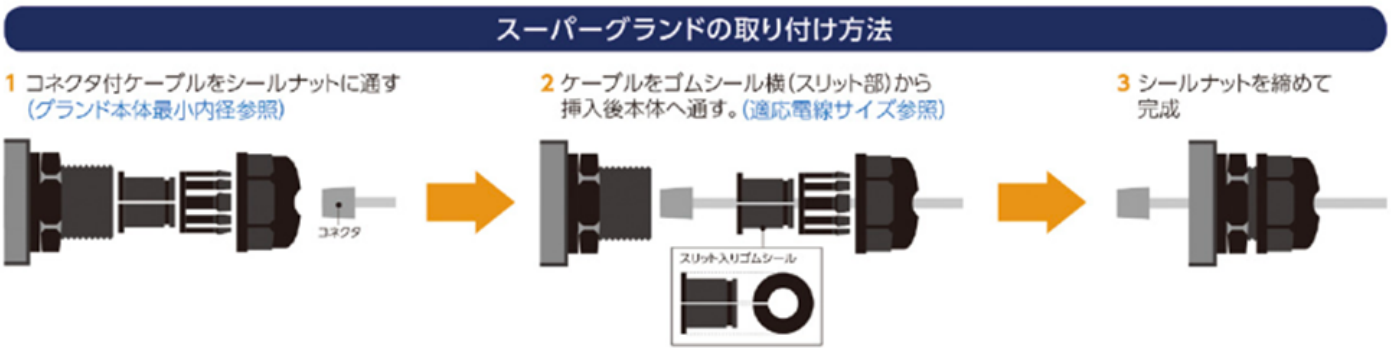

Camera-side connector

The connector on the camera side is too large to pass through the cable gland.

Use the waterproof connector supplied with the camera.



Waterproof cap on camera side

When using Amnimo's standard optional cable gland for normal installation, make connections outside of the cable gland.

Use the waterproof cap provided with the camera.

カメラ側 AC25側

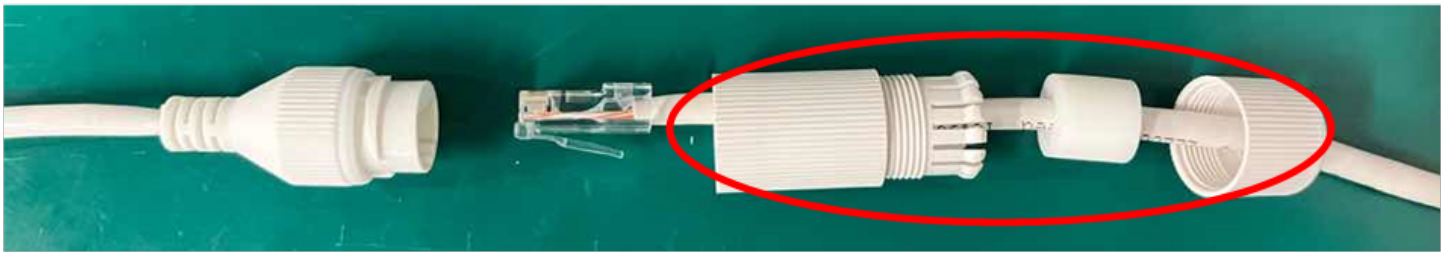

Waterproofing is secured here. Add waterproofing tape if necessary.



Cable Fixing

For excess cable length treatment, use the holes in the camera fittings and secure with cable ties.

ケーブルグランド側

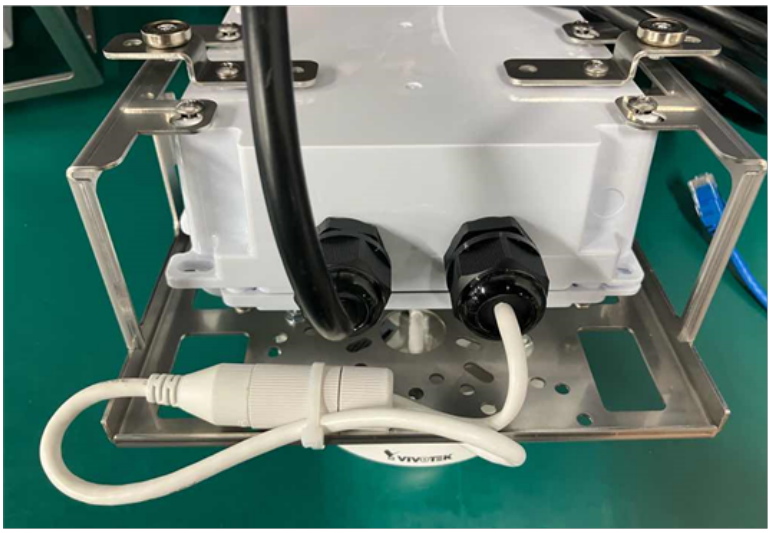

カメラプレート側

