When using PF pipe connectors

Compact router outdoor type with wireless LAN · https://manual.amnimo.com/en/docs/compact-router-outdoor-type-with-wireless-lan/when-using-pf-pipe-connectors-2/

necessities

PF pipe connector with verified connection * Not sold by Amnimo
Furukawa Electric: PFS-16KSR-I (IPX5 compliant product) https://www.furukawa.co.jp/eflex/product/plafleky/p_pfbkr.htm
Miraikogio: FPK16YPS (IPX7 compliant product) https://www.mirai.co.jp/densetu/pdf-catalog_2021/6000221.pdf

Installation Instructions

Remove the grommet.

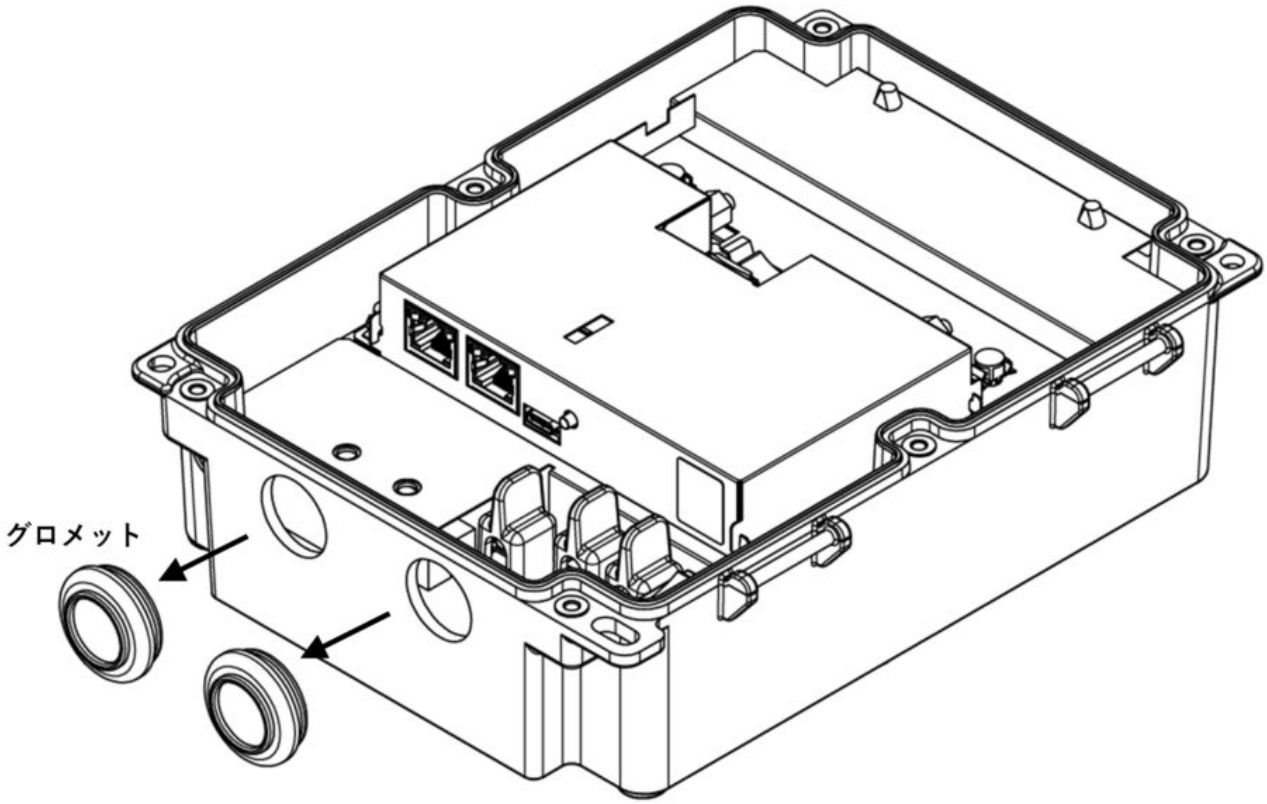

Use the body and washers from the outside and the lock nuts from the inside in the holes where the grommets were removed, and tighten and secure the box firmly with torque between them.

Memo

There is no manufacturer's recommended tightening torque for both PF pipe connectors.

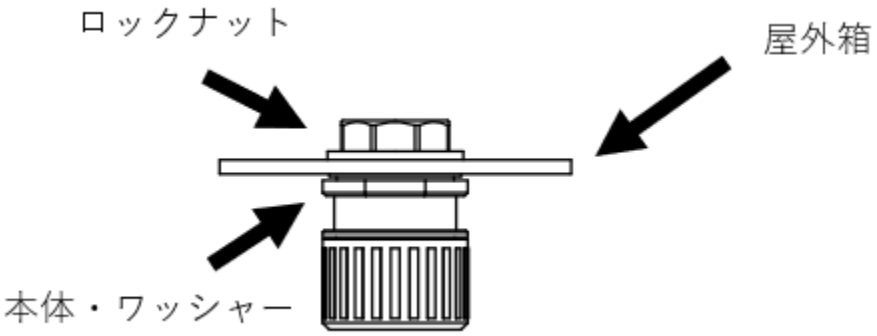

Pass the power cable and LAN cable through the PF tube and connect them to the PF tube connector.

Memo

It is not possible to pull out all the wires using only the standard holes. Additional hole machining may be required, so please consult your Amnimo sales representative prior to purchase.

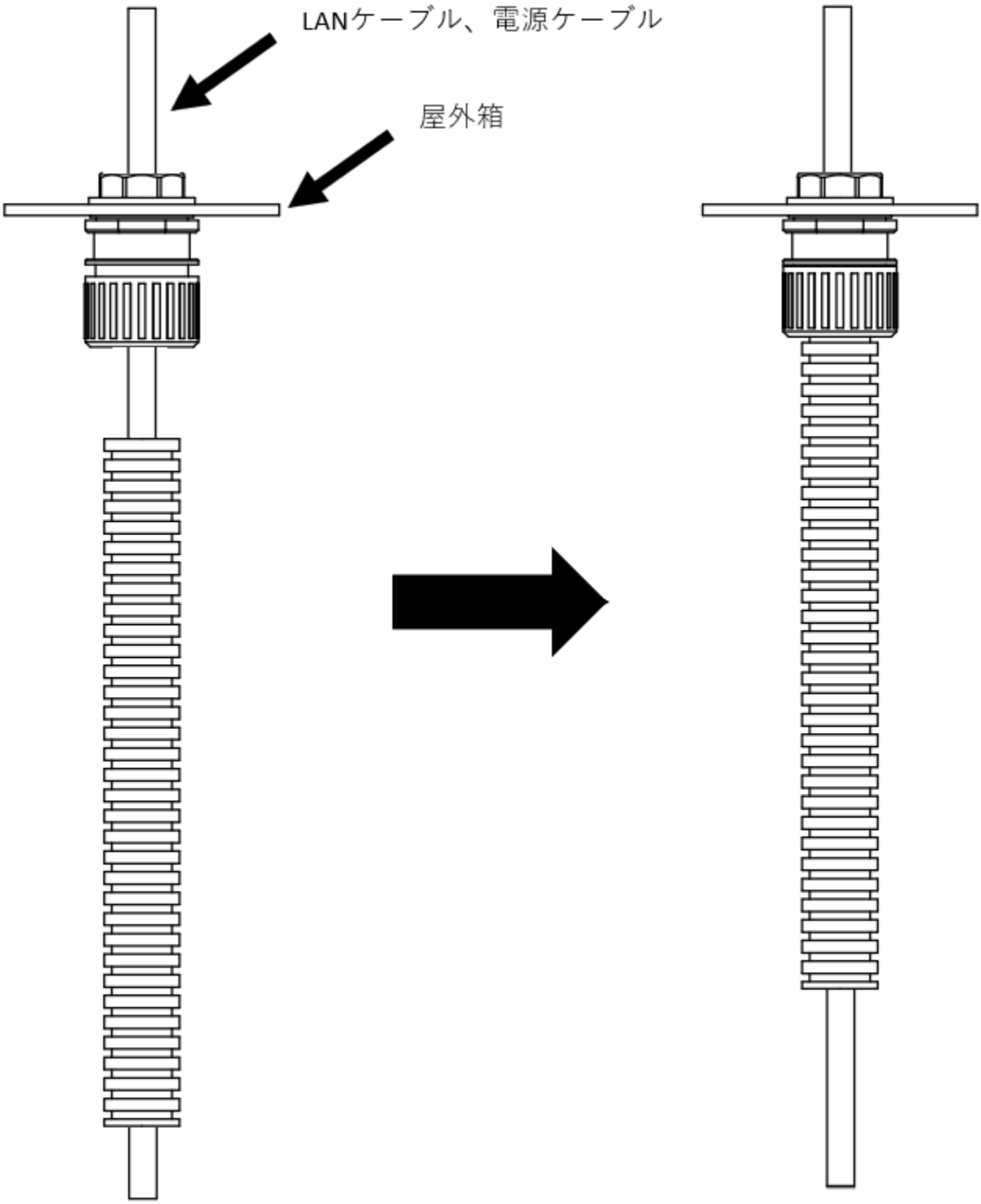

Wiring process.

- See Internal Wiring and Wiring Handling .